US008494586B2

(12) **United States Patent**
Sherman et al.

(10) **Patent No.: US 8,494,586 B2**
(45) **Date of Patent: *Jul. 23, 2013**

(54) **WIRELESS COMMUNICATOR JACKET WITH MULTIPLE OPERATIONAL STAGES**

(75) Inventors: **Itay Sherman**, Hod Hasharon (IL); **Yohan Yehouda Cohen**, Oranit (IL)

(73) Assignee: **Google Inc.**, Mountain View, CA (US)

(*) Notice: Subject to any disclaimer, the term of this patent is extended or adjusted under 35 U.S.C. 154(b) by 0 days.

This patent is subject to a terminal disclaimer.

(21) Appl. No.: **13/553,928**

(22) Filed: **Jul. 20, 2012**

(65) **Prior Publication Data**

US 2012/0289288 A1 Nov. 15, 2012

Related U.S. Application Data

(63) Continuation of application No. 12/704,039, filed on Feb. 11, 2010, now Pat. No. 8,249,656.

(60) Provisional application No. 61/152,708, filed on Feb. 15, 2009.

(51) **Int. Cl.**
H04B 1/38 (2006.01)
H04M 3/00 (2006.01)

(52) **U.S. Cl.**
USPC **455/558**; 455/557; 455/518

(58) **Field of Classification Search**
USPC 455/407, 418–420, 550.1, 552.1, 455/553.1, 556.1, 556.2, 557–559, 575.6, 455/575.8, 344–350; 710/13, 3, 4, 21, 25, 710/52, 62, 67, 71, 72, 84, 100, 300–313, 710/104–108; 341/22–34
See application file for complete search history.

(56) **References Cited**

U.S. PATENT DOCUMENTS

5,625,673 A 4/1997 Grewe et al.
5,628,055 A 5/1997 Stein
5,809,115 A 9/1998 Inkinen
5,893,037 A 4/1999 Reele et al.

(Continued)

FOREIGN PATENT DOCUMENTS

EP 1871075 A1 12/2007
WO 9421058 A1 9/1994

(Continued)

OTHER PUBLICATIONS

INTEL, "80C51SL-BG Keyboard Controller", Manual Product Preview, Oct. 1991.*

Primary Examiner — San Htun
(74) *Attorney, Agent, or Firm* — Soquel Group LLC

(57) **ABSTRACT**

A communication system, including a modular wireless communicator including a connector for connecting the communicator to any one of a plurality jacket devices, a controller for receiving identification signals that identify a jacket device that is connected to the communicator, for receiving user input signals generated by input controls from the identified jacket device, and for decoding the received user input signals based on the received identification signals, and a modem for transmitting data over the air in response to the decoded user input signals, and a plurality of jacket devices, each jacket device including input controls for receiving user input and generating corresponding user input signals, and a connector for connecting the jacket device to the communicator and for transmitting the identification signals and the user input signals to the communicator controller, wherein the communicator does not include input controls when a jacket device is not connected thereto.

11 Claims, 8 Drawing Sheets

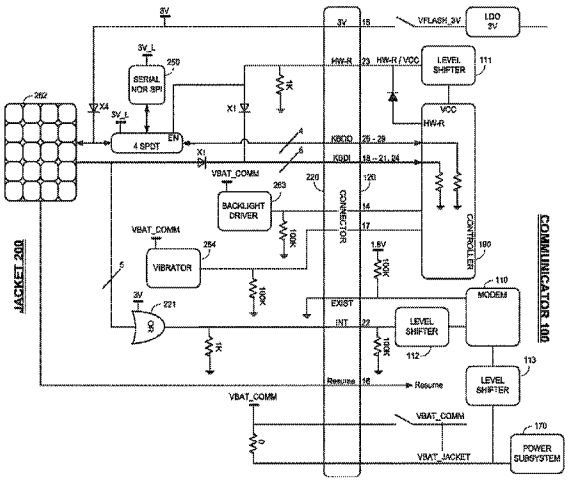

U.S. PATENT DOCUMENTS

5,907,815	A	5/1999	Grimm et al.	
5,940,076	A	8/1999	Sommers et al.	
6,188,917	B1	2/2001	Laureanti	
6,201,867	B1	3/2001	Koike	
6,243,578	B1	6/2001	Koike	
6,385,463	B1 *	5/2002	Lieberman et al.	455/557
6,477,357	B1	11/2002	Cook	
6,516,202	B1	2/2003	Hawkins et al.	
6,640,113	B1	10/2003	Shim et al.	
6,690,947	B1 *	2/2004	Tom	455/556.1
6,898,283	B2	5/2005	Wycherley et al.	
6,907,264	B1	6/2005	Sterkel	
6,999,792	B2	2/2006	Warren	
7,085,542	B2	8/2006	Dietrich et al.	
7,130,958	B2	10/2006	Chou et al.	
7,194,285	B2	3/2007	Tom	
7,266,391	B2	9/2007	Warren	
7,477,919	B2	1/2009	Warren	
7,515,937	B2	4/2009	Lee	
7,692,667	B2 *	4/2010	Nguyen et al.	345/619
2001/0021956	A1 *	9/2001	Okamoto et al.	710/102
2002/0090980	A1	7/2002	Wilcox et al.	
2002/0151327	A1	10/2002	Levitt	
2004/0137935	A1 *	7/2004	Zarom	455/550.1
2004/0233930	A1	11/2004	Colby, Jr.	
2004/0268005	A1	12/2004	Dickie	
2005/0073446	A1 *	4/2005	Lazaridis et al.	341/22
2005/0159184	A1	7/2005	Kerner et al.	
2006/0003804	A1	1/2006	Liu	
2006/0105722	A1	5/2006	Kumar	
2006/0190321	A1	8/2006	Martins Nicho et al.	
2006/0241353	A1	10/2006	Makino et al.	
2007/0004450	A1	1/2007	Parikh	
2007/0018957	A1	1/2007	Seo	
2007/0079030	A1	4/2007	Okuley et al.	
2007/0161404	A1	7/2007	Yasujima et al.	
2007/0288583	A1	12/2007	Rensin et al.	
2008/0009325	A1	1/2008	Zinn et al.	
2008/0040354	A1	2/2008	Ray et al.	
2008/0140886	A1	6/2008	Izutsu	
2010/0123643	A1 *	5/2010	Moran	345/1.1
2010/0173673	A1 *	7/2010	Lydon	455/557

FOREIGN PATENT DOCUMENTS

WO	0059247	A1	10/2000
WO	0186922	A1	11/2001
WO	03103174	A1	12/2003

* cited by examiner

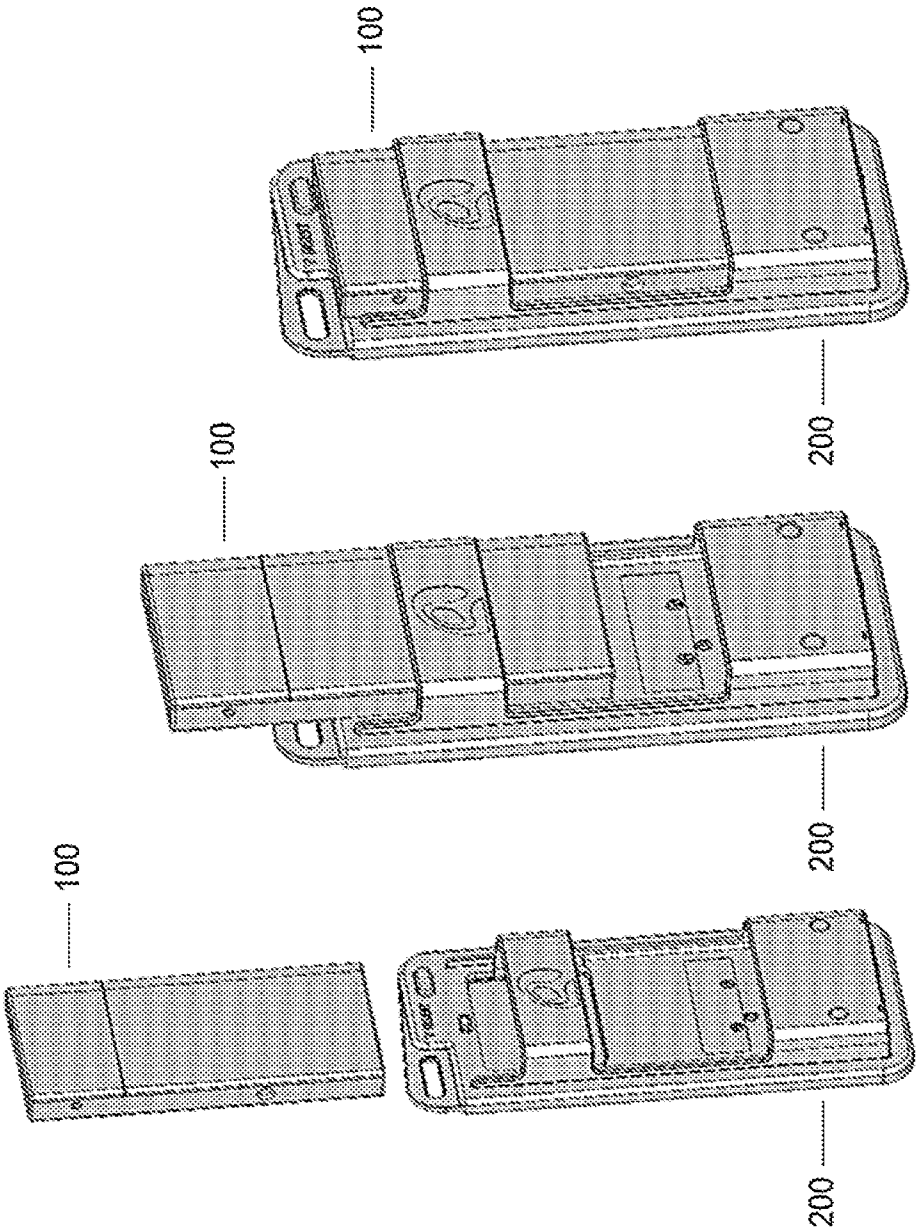

FIG. 1

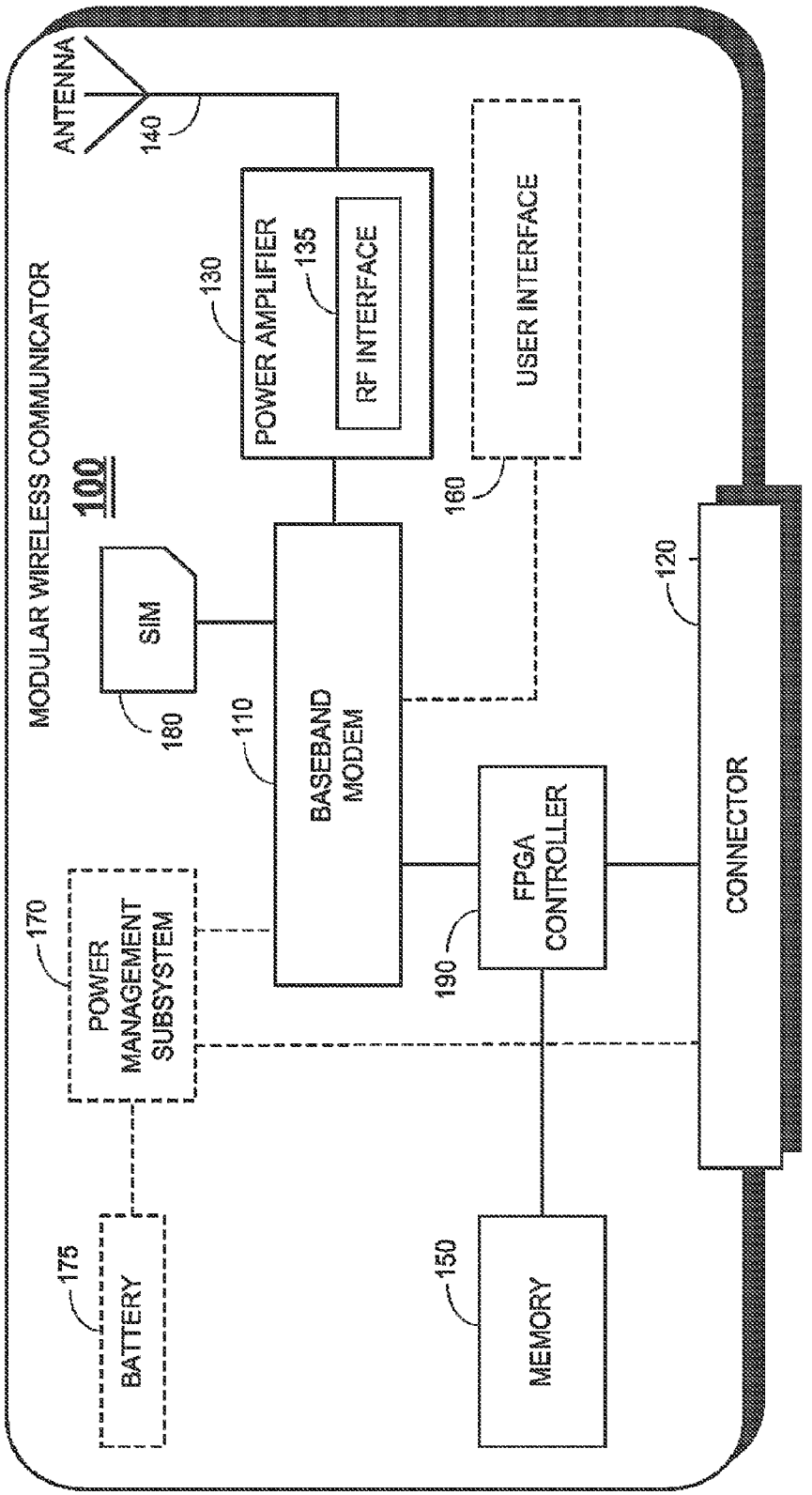
MODULAR WIRELESS COMMUNICATOR
100
ANTENNA
140
POWER AMPLIFIER
130
RF INTERFACE
135
USER INTERFACE
160
SIM
180
BASEBAND MODEM
110
FPGA CONTROLLER
190
CONNECTOR
120
POWER MANAGEMENT SUBSYSTEM
170
BATTERY
175
MEMORY
150

FIG. 2

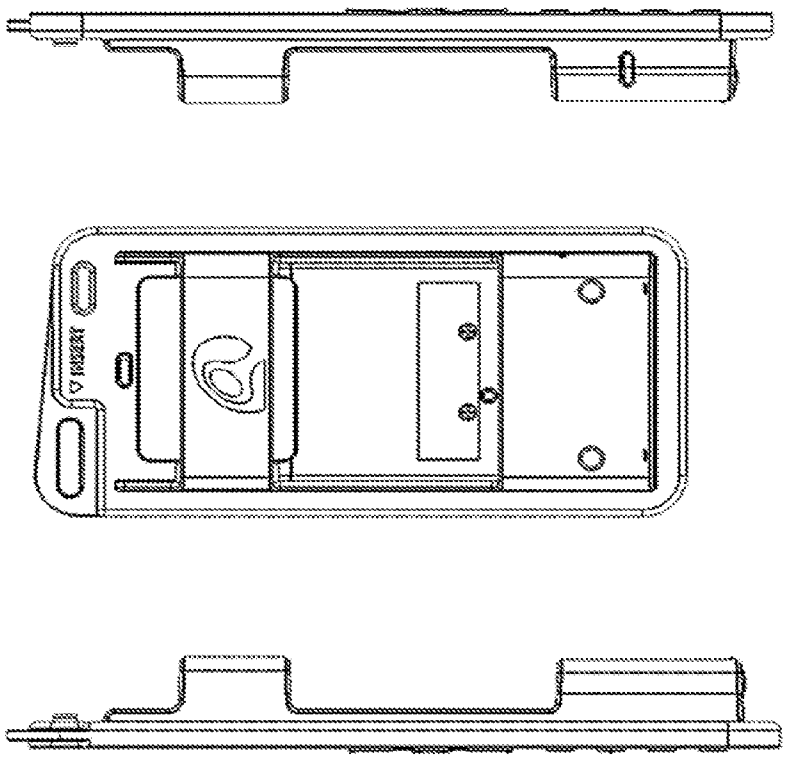

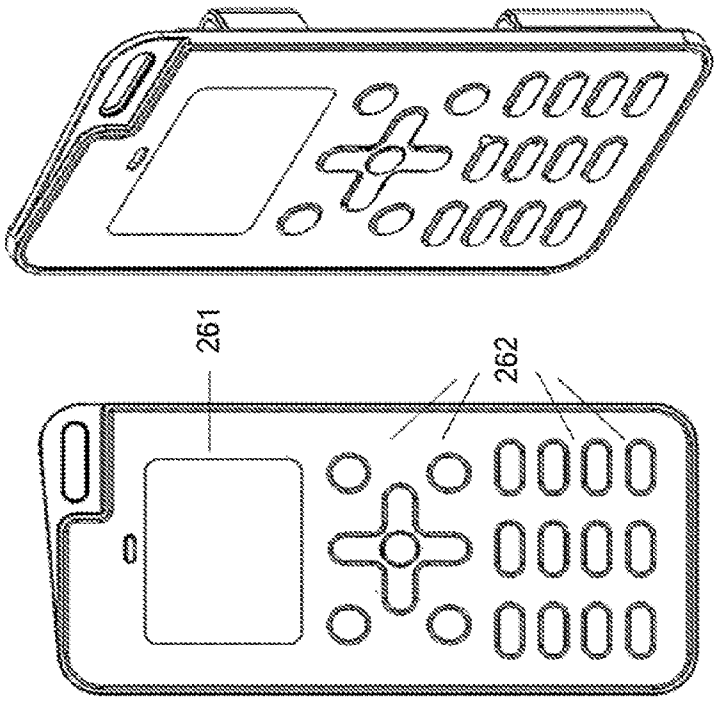

200

FIG. 3

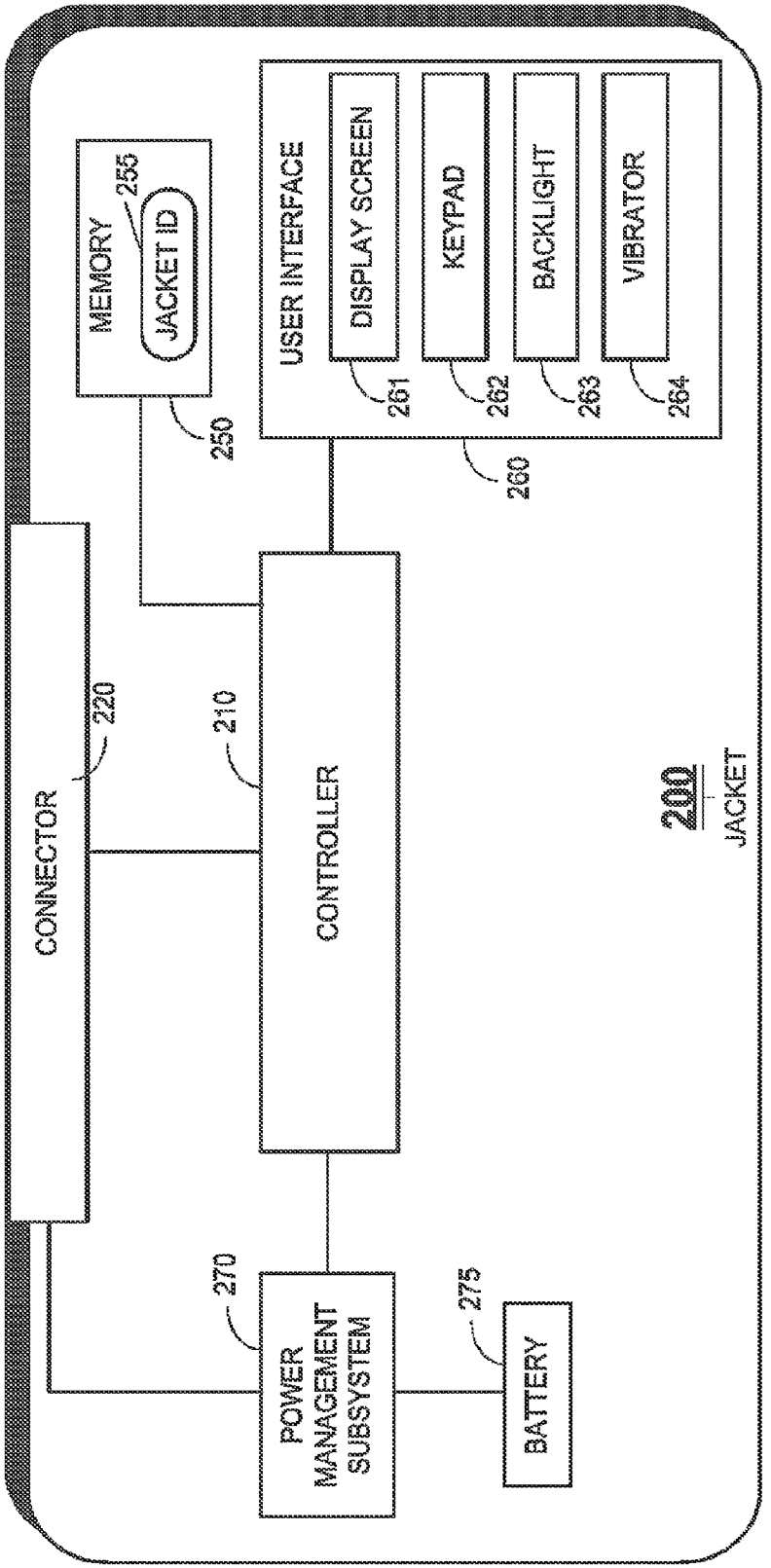
CONNECTOR
220
CONTROLLER
210
MEMORY
255
JACKET ID
250
USER INTERFACE
DISPLAY SCREEN
261
KEYPAD
262
BACKLIGHT
263
VIBRATOR
264
260
POWER MANAGEMENT SUBSYSTEM
270
BATTERY
275
200
JACKET

FIG. 4

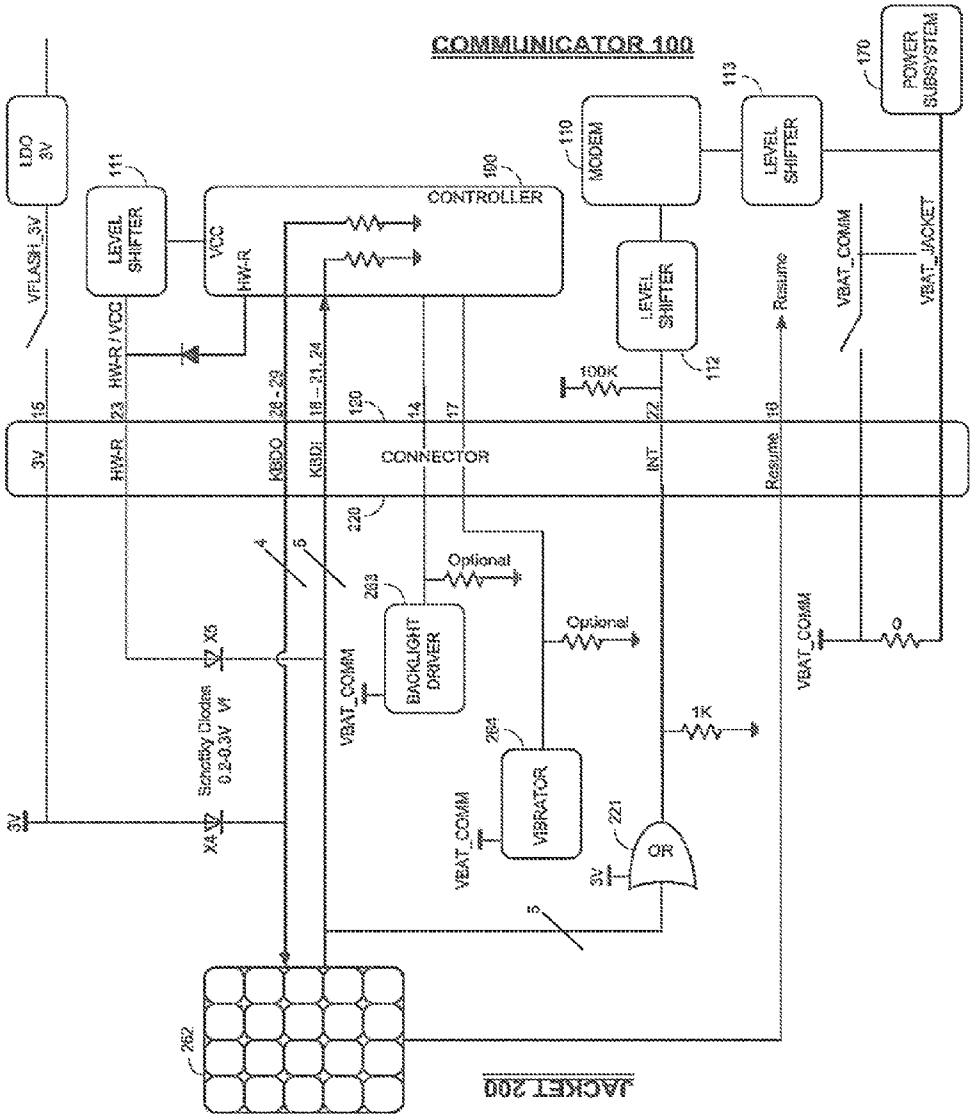
COMMUNICATOR 100
LDO 3V
VFLASH_3V
LEVEL SHIFTER
111
CONTROLLER
190
MODEM
110
LEVEL SHIFTER
113
POWER SUBSYSTEM
170
VCC
HW-R
HW-R / VCC
LEVEL SHIFTER
112
100K
Resume
VBAT_COMM
VBAT_JACKET
3V
HW-R
KBDO
KBDI
CONNECTOR
INT
Resume
Optional
BACKLIGHT DRIVER
263
VBAT_COMM
Schottky Diodes 0.2-0.3V Vf
X5
X4
3V
VIBRATOR
264
VBAT_COMM
OR
221
1K
0
JACKET 200
262

FIG. 5

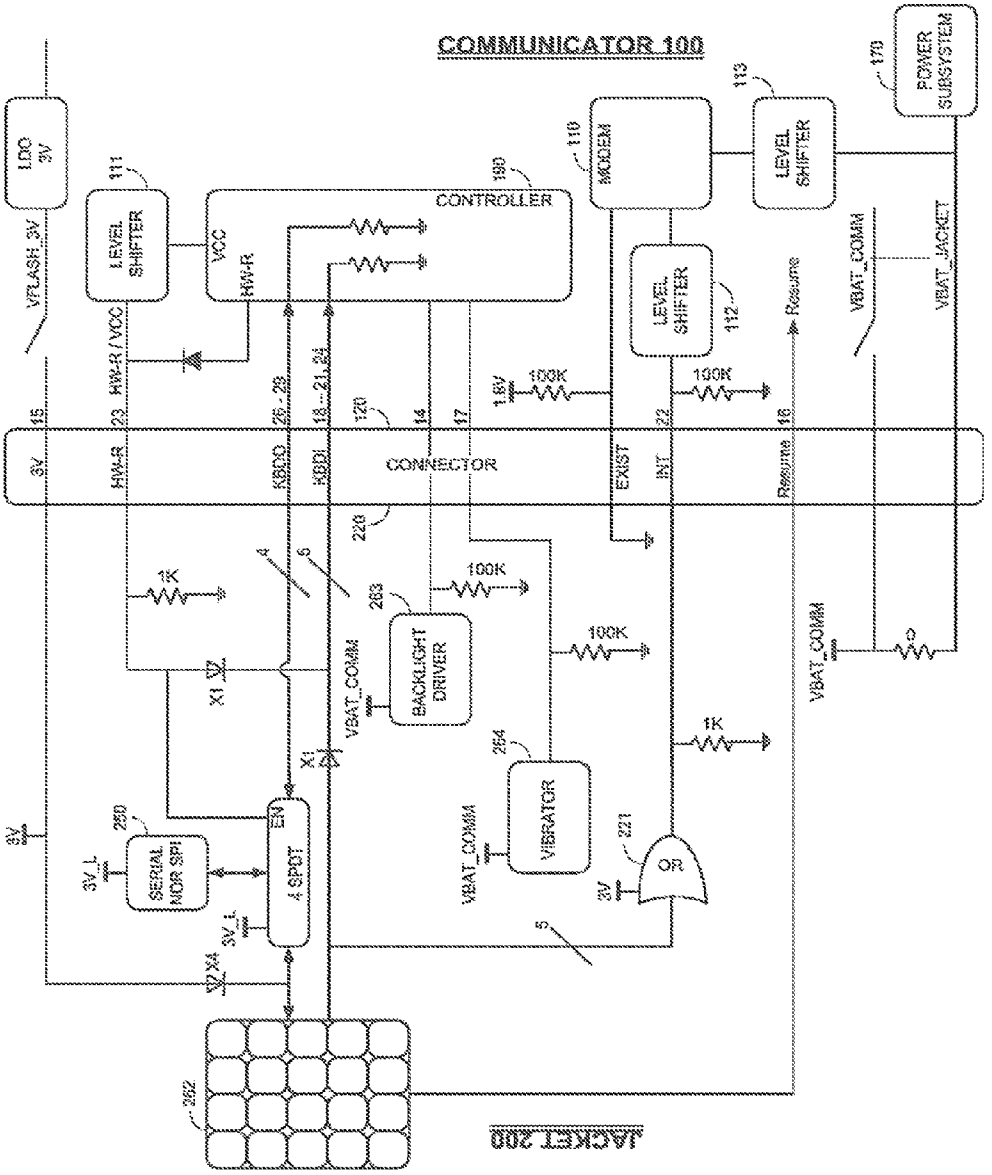
COMMUNICATOR 100
LDO 3V
VFLASH_3V
LEVEL SHIFTER
111
VCC
HW-R
CONTROLLER
190
MODEM
110
LEVEL SHIFTER
113
POWER SUBSYSTEM
170
LEVEL SHIFTER
112
Resume
VBAT_COMM
VBAT_JACKET
HW-R / VCC
3V
HW-R
KBDO
KBDI
CONNECTOR
120
EXIST
INT
Resume
220
1K
100K
BACKLIGHT DRIVER
263
VBAT_COMM
X1
VIBRATOR
264
OR
221
SERIAL NOR SPI
250
4 SPDT
EN
3V_L
X4
262
JACKET 200

FIG. 6

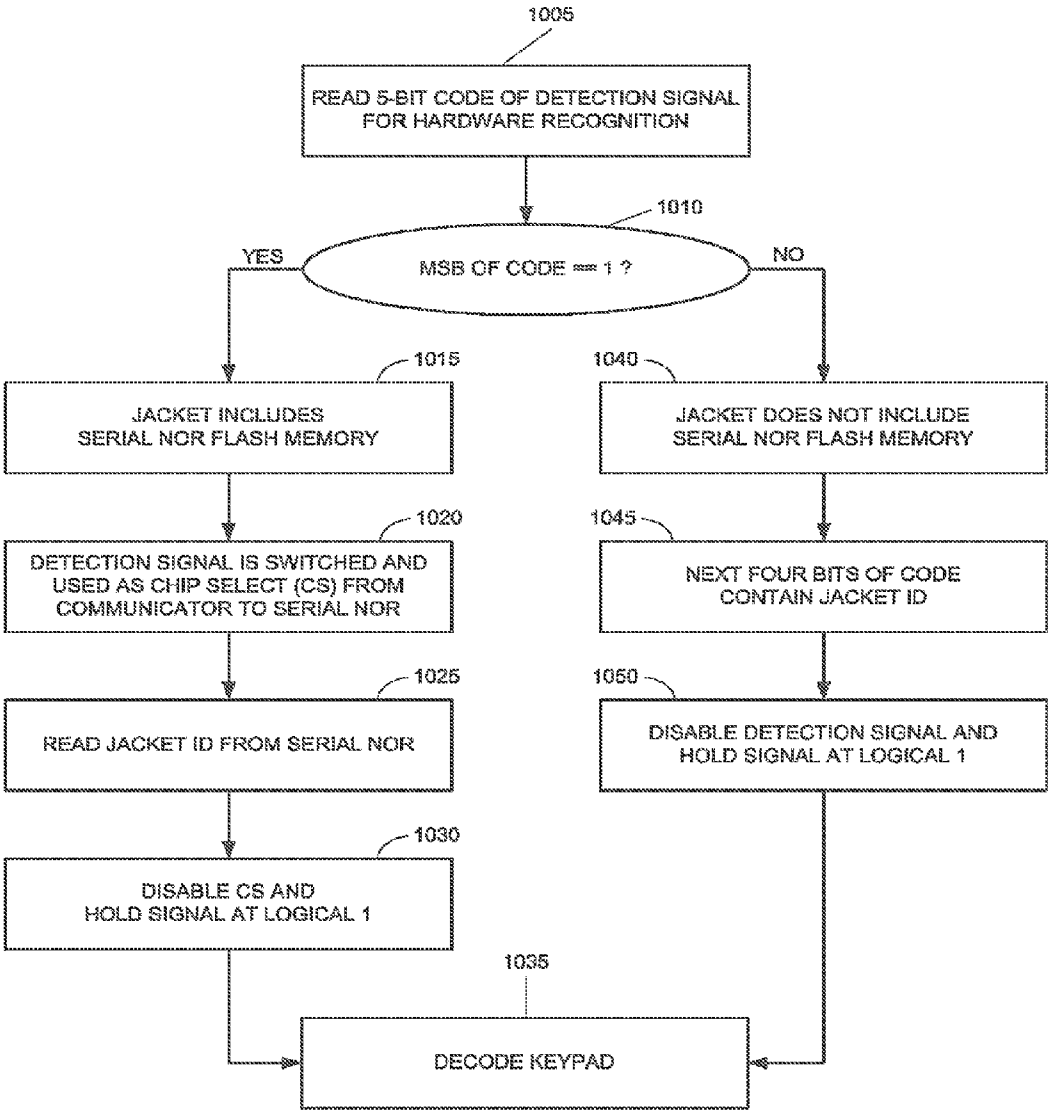
1005
READ 5-BIT CODE OF DETECTION SIGNAL FOR HARDWARE RECOGNITION
1010
MSB OF CODE == 1 ?
YES
NO
1015
JACKET INCLUDES SERIAL NOR FLASH MEMORY
1020
DETECTION SIGNAL IS SWITCHED AND USED AS CHIP SELECT (CS) FROM COMMUNICATOR TO SERIAL NOR
1025
READ JACKET ID FROM SERIAL NOR
1030
DISABLE CS AND HOLD SIGNAL AT LOGICAL 1
1040
JACKET DOES NOT INCLUDE SERIAL NOR FLASH MEMORY
1045
NEXT FOUR BITS OF CODE CONTAIN JACKET ID
1050
DISABLE DETECTION SIGNAL AND HOLD SIGNAL AT LOGICAL 1
1035
DECODE KEYPAD

FIG. 7

Pin No.	Pin Name	Simple Jacket Functionality	Complex Jacket Functionality	Connected to
1	USB_DP	USB D+/Audio right	USB D+/Audio right	USB switch
2	USB_DN	USB D-/Audio left	USB D-/Audio left	USB switch
3	HS_MIC	Audio microphone	Audio microphone	HS_MIC
4	USB_VBUS	USB_VBUS	USB_VBUS	VBUS
5	JTAG V-PUMP	V-PUMP 3.3v	V-PUMP 3.3v	FPGA_VPUMP
6	GND	GND	GND	GND
7	AUDIO_RIGHT	Not used	AUDIO_RIGHT	HS_R1
8	AUDIO_LEFT	Not used	AUDIO_LEFT	HS_L1
9	JTAG_TDO	JTAG_TDO	JTAG_TDO	FPGA_TDO
10	GND	GND	GND	GND
11	VBAT_HOST	VBAT_J	VBAT_J	Power ADCIN3 & VAC
12	JTAG_TRST	JTAG_TRST	JTAG_TRST	FPGA_TRST
13	VBAT_comm	VBAT_COMM	VBAT_COMM	Battery
14	RCLK/WLED	WLED enable control pin	RCLK - Return clock	FPGA pin C26
15	3V-VCC	3V	Not Used	SJ_3V_VCC
16	RESUME	RESUME	RESUME	Power - RPWON
17	COMM_SIG/32KHz	Vibrator enable control	32 KHz Clock	FPGA pin A36
18	COMM_DAT0 (CAM/LCD/CS-0)	KBD10	COMM_DAT0 (CAM/LCD/CS-0)	FPGA pin A30
19	COMM_DAT1 (CAM/LCD/CS-1)	KBD11	COMM_DAT1 (CAM/LCD/CS-1)	FPGA pin A31
20	COMM_DAT2 (CAM/LCD/CS-2)	KBD12	COMM_DAT2 (CAM/LCD/CS-2)	FPGA pin B27
21	COMM_DAT3 (CAM/LCD/CS-3)	KBD13	COMM_DAT3 (CAM/LCD/CS-3)	FPGA pin B29
22	COMM_MNG/INT	Jacket Interrupt	Jacket Interrupt	Modem pin K8
23	VCC_COMM_J/HW-R	HW-R-3V	VCC COMM - 3V	FPGA pin A44 & pin C12
24	COMM_CLK/52MHz	KBD14	52 MHz Clock	FPGA pin B32
25	GND	GND	GND	GND
26	COMM_DAT4/SPI-CLK	KBD00	SPI_CLK	FPGA pin A32
27	COMM_DAT5/ commSPI-O/jacketSPI-I	KBD02	SPI_MOSI	FPGA pin A33
28	COMM_DAT6/ commSPI-I/jacketSPI-O	KBD03	SPI_MISO	FPGA pin B30
29	COMM_DAT7/SPI-CS	KBD01	SPI_CS	FPGA pin G27

FIG. 8

WIRELESS COMMUNICATOR JACKET WITH MULTIPLE OPERATIONAL STAGES

CROSS REFERENCES TO RELATED APPLICATIONS

This application is a continuation of U.S. application Ser. No. 12/704,039, now U.S. Pat. No. 8,249,656, entitled WIRELESS COMMUNICATION JACKET WITH MULTIPLE OPERATIONAL STAGES, filed on Feb. 11, 2010 by inventors Itay Sherman and Yohan Cohen, which claims benefit of U.S. Provisional Application No. 61/152,708, entitled WIRELESS COMMUNICATOR JACKET WITH MULTIPLE OPERATIONAL STAGES, filed on Feb. 15, 2009 by inventors Itay Sherman and Yohan Cohen.

FIELD OF THE INVENTION

The present invention relates to miniature wireless communicators that operate in conjunction with jacket devices.

BACKGROUND OF THE INVENTION

Miniaturization of electronic devices poses many challenges for efficiency and cost-effectiveness of mechanical design, circuit design and signal processing. Among these challenges is the challenge of developing and manufacturing devices with small connectors that are reliable and that use a limited number of pins.

SUMMARY OF THE DESCRIPTION

Aspects of the present invention relate to a miniature modular wireless communicator, such as a cell phone module, that interoperates with a variety of jackets. When attached to or inserted in the jacket, the communicator provides each jacket with wireless communication capabilities, and the jacket provides the communicator with a user interface.

Embodiments of the present invention include inexpensive jackets with very simple functionality. These simple jackets have a display screen, a keypad, an optional backlight for the keypad, and an optional vibrator. The simple jackets may also have a serial NOR flash memory. The simple jackets have jacket IDs, which are used by the communicator to identify the jackets.

Embodiments of the present invention also include jackets with complex functionality.

Because of their low cost, users can generally afford to purchase a variety of distinct jackets, each having a unique look & feel, with a unique shape, a unique casing, a unique display screen and a unique keypad. Designers may create business jackets, party jackets, glitzy jackets, formal jackets, outdoors jackets, sports jackets, travel jackets, ethnic jackets, club jackets, student jackets, collector jackets, humorous jackets, theme jackets, souvenir jackets, celebrity jackets, custom ordered jackets, and more. And users can change jackets at will, and dress up their cell phones according to occasion and personal taste. Low cost jackets also afford marketing opportunities, whereby jackets are branded and used as marketing collateral and distributed for free.

Clearly the success of the "jacket" business depends on the ability to inexpensively manufacture the jackets.

In accordance with embodiments of the present invention, a digital interface uses 12 connector pins for simple jacket identification and for keypad decoding. Some of the communication lines through the connector pins are used for general purpose I/O, and run directly to the keypad.

Embodiments of the present invention use the 12 pins in a very efficient way to enable four operational stages, and transitions therebetween. The four stages include:

Stage 1: Initial Type Detection—determining whether the jacket is a simple type of jacket or a complex type of jacket.

Stage 2: Complex Jacket—12-pin communication bus for a designated protocol.

Stage 3: Simple Jacket Identification—identifying a jacket ID.

Stage 4: Normal Keypad Decode—decoding a 4×5 keypad array and controlling activation of a backlight for the keypad and activation of a vibrator.

There is thus provided in accordance with an embodiment of the present invention a method of communication between a modular wireless communicator and a jacket device that is connected to the modular wireless communicator via a connector that connects a plurality of signal transmission lines, the jacket device including a keypad for operating the modular wireless communicator, including receiving a multi-bit signal over multiple signal transmission lines, one bit of which indicating whether the jacket device includes a serial NOR flash memory, if the jacket device includes a serial NOR flash memory, then reading a jacket ID from the serial NOR flash memory, if the jacket device does not include a serial NOR flash memory, then reading the jacket ID from other bits of the multi-bit signal, receiving jacket keypad signals over multiple signal transmission lines, and decoding the jacket keypad signals based on the jacket ID.

There is additionally provided in accordance with an embodiment of the present invention a communication system including a modular wireless communicator including a connector for connecting the communicator to any one of a plurality jacket devices via a plurality of signal transmission lines, a controller, communicatively coupled with the connector, for receiving signals, over multiple transmission lines, that identify a jacket device that is connected to the communicator, and for receiving signals, over multiple transmission lines, generated by keypad presses from the identified jacket device, and a modem, communicatively coupled with the controller, for transmitting data over the air in response to the keypad presses, and a plurality of jacket devices, each jacket device including a keypad for receiving user input via keypad presses, and a connector, communicatively coupled with said keypad, for connecting the jacket device to said communicator via the plurality of signal transmission lines.

BRIEF DESCRIPTION OF THE DRAWINGS

The present invention will be more fully understood and appreciated from the following detailed description, taken in conjunction with the drawings in which:

FIG. **1** is an illustration of a modular wireless communicator and a jacket therefor, in accordance with an embodiment of the present invention;

FIG. **2** is a simplified block diagram of the modular wireless communicator of FIG. **1**, in accordance with an embodiment of the present invention;

FIG. **3** is an illustration of the jacket of FIG. **1**, in accordance with an embodiment of the present invention;

FIG. **4** is a simplified block diagram of the jacket of FIG. **1**, in accordance with an embodiment of the present invention;

FIG. **5** is a high level circuit diagram for a first jacket, in accordance with an embodiment of the present invention;

FIG. **6** is a high level circuit diagram for a second jacket that includes a serial NOR flash memory, in accordance with an embodiment of the present invention;

FIG. **7** is a simplified flowchart of a method for jacket identification, in accordance with an embodiment of the present invention; and

FIG. **8** is a connector pinout table for an implementation of a communicator that is connected to a jacket, in accordance with an embodiment of the present invention.

DETAILED DESCRIPTION

Aspects of the present invention relate to a miniature modular wireless communicator, such as a modular cell phone, and a jacket device. The communicator attaches to the jacket, or inserts partially or entirely inside the jacket. When attached to or inserted in the jacket, the communicator and jacket interoperate—the communicator providing the jacket with wireless communication capabilities, and the jacket providing the communicator with a user interface.

Embodiments of the present invention enable manufacture of jackets at very low cost. Users can afford to buy a variety of jackets, which in turn enables an entire market for cell phone jacket design.

Reference is now made to FIG. **1**, which is an illustration of a modular wireless communicator **100** and a jacket **200**, in accordance with an embodiment of the present invention. Reference is also made to FIG. **2**, which is a simplified block diagram of modular wireless communicator **100**, in accordance with an embodiment of the present invention.

FIG. **1** shows stages of attaching communicator **100** to jacket **200**. As shown in FIG. **2**, communicator **100** includes a cellular base band modem **110**, a connector **120** for connecting the communicator to jacket **200**, a power amplifier **130** with an RF interface **135** that is connected to an antenna **140**, a memory **150**, a subscriber identity module (SIM) card **180**, and an FPGA controller **190**. Modem **110** controls the wireless communication functionality of communicator **100**. Controller **190** executes programmed instructions that control the data flow between communicator **100** and jacket **200** via signal lines that pass through connector **120**. Optionally, communicator **100** may include a user interface **160**, and a power management subsystem **170** that charges a battery **175**.

Reference is now made to FIG. **3**, which is an illustration of jacket **200**, in accordance with an embodiment of the present invention. Reference is also made to FIG. **4**, which is a simplified block diagram of jacket **200**, in accordance with an embodiment of the present invention. FIG. **3** shows five perspective views of jacket **200**. As shown in FIG. **4**, jacket **200** includes a field-programmable gate array (FPGA) controller **210**, a connector **220** for connecting the jacket to communicator **100**, a memory **250** storing a jacket ID **255**, a user interface **260** including a display screen **261**, a keypad **262**, a backlight **263** for keypad **262**, and a vibrator **264**, and a power management subsystem **270** and battery **275**. In one embodiment of the present invention, jacket ID **255** is a 4-bit code. User interface **260** may optionally include additional components (not shown) such as a microphone, a headset audio jack, an earpiece, and a mono speaker or stereo speakers.

In accordance with embodiments of the present invention, communicator **100** interoperates with a variety of jackets **200**, some of which are standalone devices, and some of which are only operable in conjunction with communicator **100**. Some jackets, such as the jacket shown in FIG. **3**, have only a screen, a keypad, an optional backlight for the keypad, and an optional vibrator. Such jackets are referred to herein as "simple" jackets. Simple jackets may include a serial NOR flash memory.

Other jackets have more functionality, and are referred to herein as "complex" jackets. Communicator **100** may also interoperate with peripheral devices, in addition to jackets **200**.

One of the many challenges in developing and manufacturing communicator **100** is the requirement of miniature size and reliable connection to jackets **200**. As such, communicator **100** is pin-limited. In one implementation of the present invention, a 12-pin interface is used to provide both a full communication bus for complex jackets, and an interface for jacket identification and keypad decoding for simple jackets. The 12 interface pins provide multiplexed functionality for four operational stages. Functionality switches according to transitions from a current stage to a next stage, as described in detail hereinbelow.

Reference is now made to FIG. **5**, which is a high level circuit diagram for a first jacket, in accordance with an embodiment of the present invention. Reference is also made to FIG. **6**, which is a high level circuit diagram for a second jacket that includes a serial NOR flash memory **250**, in accordance with an embodiment of the present invention. Components of communicator **100** are shown to the right of connector **120/220**, and components of jacket **200** are shown to the left of connector **120/220**.

As shown in FIGS. **5** and **6**, connector **120/220** uses 4 pins (pins **26-29**) for keypad columns, 5 pins (pins **18-21** and **24**) for keypad rows, one pin for activating backlight **263**, one pin for activating vibrator **264**, and one additional pin connected to a level shifter **111**. A single pin (pin **14**) is used to control an N-channel FET transistor, which turns backlight **263** on and off. Similarly, a single pin (pin **17**) is used to control another N-channel FET transistor, which turns vibrator **264** on and off. The pin (pin **23**) connected to level shifter **111** is used for hardware recognition.

TABLE I describes four operational stages for these jackets, and transitions therebetween.

TABLE I

Operational Stages and Transitions There between

Stage	Functionality
1. Initial Type Detection	Controller 190 senses voltage on one of the pins. Jacket 200 uses a pull-up or a pull-down resistor to indicate the type of jacket (simple or complex), via a level shifter 111. For a complex jacket 200, proceed to Stage 2. For a simple jacket 200, proceed to Stage 3.
2. Complex Jacket	If jacket 200 is a complex jacket, the 12 pins are used as a communication bus with a designated protocol. In one implementation the pins are used as follows: Clock In/Out, Data Bus 0-7, Management Bus In/Out
3. Simple Jacket Identification	If jacket 200 is a simple jacket, controller 190 drives a logical '1' to identification circuitry that is muxed over lines that are used for keypad analysis. If the most significant bit (MSB) of the code is '1', then jacket 200 includes a serial NOR flash memory (FIG. 6), from which jacket ID 255 is read. If the MSB is '0', then jacket 200 does not include a serial NOR flash memory (FIG. 5), and the next 4 bits indicate the jacket ID 255. Proceed to Stage 4.

TABLE I-continued

Operational Stages and Transitions There between	
Stage	Functionality
4. Normal Keypad Decode	Controller 190 performs matrix keypad decode for a keypad array 262 of 4 × 5 buttons, which requires 4 + 5 = 9 signals. Two other lines are used to control activation of backlight 263 and vibrator 264.

Regarding Stage 1, Initial Type Detection, when communicator **100** is connected to jacket **200**, the interrupt line (pin **22**), which was in high state on communicator **100** prior to being connected to jacket **200**, is pulled down by a 1 kΩ resistor. This indicates to controller **190** that jacket **200** is now connected thereto. Subsequently controller **190** opens the VBAT_COMM switch towards jacket **200**. The 3V directed from communicator **100** to jacket **200** is disconnected at this Stage, to prevent false ID reading.

In order to determine whether jacket **200** is a simple jacket or a complex jacket, controller **190** checks the VCC_COMM pin (pin **23**). The VCC_COMM pin, on complex jackets, is 3V directed from jacket **200** to communicator **100**. On the side of jacket **200**, the VCC_COMM is generated by an LDO, and is cut from VBAT_COMM, which passes on connector **220**. On the side of communicator **100**, VCC_COMM is connected to a 1.8V bank, which is always on, and thus requires a 3V to 1.8V level shifter **111** along the way.

As such, if controller **190** finds that the VCC_COMM pin is high (1.8V), then controller **190** identifies jacket **200** as being a complex jacket. If controller **190** finds that the VCC_COMM pin has no voltage, then controller **190** identifies jacket **200** as being a simple jacket.

Regarding Stage 3, Simple Jacket Identification, reference is now made to FIG. **7**, which is a simplified flowchart of a method for jacket identification, in accordance with an embodiment of the present invention. At step **1005** controller **190** reads a 5-bit code of a detection signal. Specifically, referring to FIGS. **5** and **6**, the HW-R pin (pin **23**) is set to high and drives the VCC_COMM/HW-R line. The VCC_COMM/HW-R passes to jacket **200** and drives **1-5** pull-up resistors located on the KBDI lines. These pull-up resistors generate a 5-bit code on the KBDI lines, which is sampled by controller **190**. This is the 5-bit code that is read at step **1005**.

If the most significant bit (MSB) of the 5-bit code is '1', as determined at step **1010**, then jacket **200** includes serial NOR flash memory **250** (as in FIG. **6**), as indicated at step **1015**. At step **1020** the detection signal is switched, and used as a chip select (CS) signal for selecting between communicator **100** and serial NOR **250**. At step **1025**, some of the communication bus data lines are used to access serial NOR **250** and read the jacket ID **255** therefrom. At step **1030**, after content of serial NOR **250** is read, the CS is disabled and held at logical '1'. As such, the output of serial NOR **250** is put in tri-state, and thus blocked from interfering with keypad decode operations. The 3V switch on communicator **100** is opened, and feeds jacket **200** through pin **15**. Subsequently, at step **1035** controller **190** transitions to Stage 4, Normal Keypad Decode.

If the MSB of the code is '0', as determined at step **1010**, then jacket **200** does not include a serial NOR flash memory (as in FIG. **5**), as indicated at step **1040**. At step **1045** the next four bits of the code read at step **1005** are used to identify the jacket ID **255**. At step **1050**, after identifying the jacket ID, the detection signal is disabled and held at logical '1', thus blocking the identification data from interfering with keypad decode operations. The 3V switch on communicator **100** is opened, and feeds jacket **200** through pin **15**. Subsequently, at step **1035** controller **190** transitions to Stage 4, Normal Keypad Decode.

The jacket ID identified at step **1025** or step **1045**, is used to identify the jacket's keypad, so that controller **190** is able to decode the keypad strokes.

Regarding Stage 4, Normal Keypad Decode, keypad operation is generally divided into Idle State, and Flash Freeze. During "Idle State", keypad scans are performed periodically. Any keypad press is immediately sampled by controller **190**. During "Flash Freeze", the keypad is not scanned. When a keypad is pressed, controller **190** must be awakened and scan the keypad.

All four KBDO lines in FIGS. **5** and **6** are pulled-up by resistors on the side of jacket **200**. When a key is pressed, at least one of the KBDI lines is pulled high, and an OR gate **221** output is initiated to high state. The output of OR gate **221** is connected to the interrupt line that goes to modem **110**. Modem **110** senses the interrupt line and awakens controller **190** from Flash Freeze. Once controller **190** is awakened, it begins scanning the keypad lines. It is noted that, typically, a standard keypad press is sufficiently long to generate a wakeup and a keypad scan without missing the keypad press.

When communicator **100** is disconnected from jacket **200**, VBAT_JACKET drops immediately to 0V. VBAT_JACKET is connected to modem **110** via level shifter **113**. As such, an interrupt is used to notify controller **190** of jacket disconnection, instead of controller **190** having to regularly poll VBAT_JACKET.

Implementation Details

FIG. **8** is a connector pinout table for an implementation of a communicator that is connected to a jacket, in accordance with an embodiment of the present invention. The table of FIG. **8** corresponds to the circuit diagrams of FIGS. **5** and **6**. As such, pins **18-21**, **24** and **26-29** are connected to keypad **262**, pin **14** is connected to optional backlight driver **263**, pin **17** is connected to optional vibrator **264**, and pin **23** is used for hardware recognition. Power for backlight driver **263** and for vibrator **264** is taken from VBAT_COMM. In an alternate implementation, power for backlight driver **263** and for vibrator **264** is taken from VCC_3V.

In the foregoing specification, the invention has been described with reference to specific exemplary embodiments thereof. It will, however, be evident that various modifications and changes may be made to the specific exemplary embodiments without departing from the broader spirit and scope of the invention as set forth in the appended claims. Accordingly, the specification and drawings are to be regarded in an illustrative rather than a restrictive sense.

What is claimed is:

1. A communication system, comprising:

a modular wireless communicator comprising:

a connector for connecting the communicator to any one of a plurality of jacket devices via a plurality of signal transmission lines, whereby the communicator receives its inputs from the jacket device that is currently connected thereto;

a controller, communicatively coupled with said connector, for receiving and identifying jacket identification signals that identify a jacket device that is connected to the communicator, for receiving and identifying user input signals generated by input controls from the identified jacket device, and for decoding the user input signals based on the jacket identification signals, wherein the jacket identification

signals represent an n-bit encoded jacket identifier where n is no greater than the number of signal transmission lines; and

a modem, communicatively coupled with said controller, for transmitting data over the air in response to the decoded user input signals; and

a plurality of jacket devices, each jacket device comprising:

a vibrator controlled by a signal received from said communicator over one of the signal transmission lines;

a backlight driver controlled by a signal received from said communicator over another one of the signal transmission lines;

input controls for receiving user input and generating corresponding user input signals; and

a connector, communicatively coupled with said input controls, for connecting the jacket device to said communicator and for transmitting, over others of the signal transmission lines, the jacket identification signals and the user input signals to said communicator controller, wherein the jacket identification signals are transmitted over the same signal transmission lines as at least some of the input signals.

2. The communication system of claim **1** wherein the plurality of signal transmission lines comprises at most 12 lines.

3. The communication system of claim **1** wherein said jacket input controls comprise a keypad, and wherein the user input signals comprise row and column signals for a keypad array.

4. The communication system of claim **1** wherein at least one of said plurality of jacket devices comprises a battery for supplying power to the jacket device, and for supplying power to said communicator when said communicator is connected to the jacket device.

5. The communication system of claim **1** wherein at least one of said plurality of jacket devices comprises a display screen for displaying input from said input controls and output from said modem.

6. A modular wireless communicator, comprising:

a connector for connecting the communicator to any one of a plurality jacket devices via a plurality of signal transmission lines, whereby the communicator receives its inputs from the jacket device that is currently connected thereto;

a controller, communicatively coupled with said connector, for sending respective control signals over respective ones of the signal transmission lines to a jacket vibrator and to a jacket backlight driver, for receiving, over others of the signal transmission lines, and for identifying jacket identification signals that identify a jacket device that is connected to the communicator, for receiving and identifying user input signals generated by input controls from the identified jacket device, and for decoding the user input signals based on the jacket identification signals, wherein the jacket identification signals represent an n-bit encoded jacket identifier where n is no greater than the number of signal transmission lines, and wherein the jacket identification signals are received over the same signal transmission lines as at least some of the input signals; and

a modem, communicatively coupled with said controller, for transmitting data over the air in response to the decoded user input signals.

7. The modular wireless communicator of claim **6** wherein the plurality of signal transmission lines comprises at most 12 lines.

8. The modular wireless communicator of claim **6** further comprising a subscriber identity module (SIM) card.

9. The modular wireless communicator of claim **6** further comprising:

an antenna; and

a power amplifier connected to said antenna.

10. The modular wireless communicator of claim **6** further comprising:

a battery; and

a power management system for charging said battery.

11. The modular wireless communicator of claim **6** further comprising a level shifter from 3V to 1.8V.

* * * * *